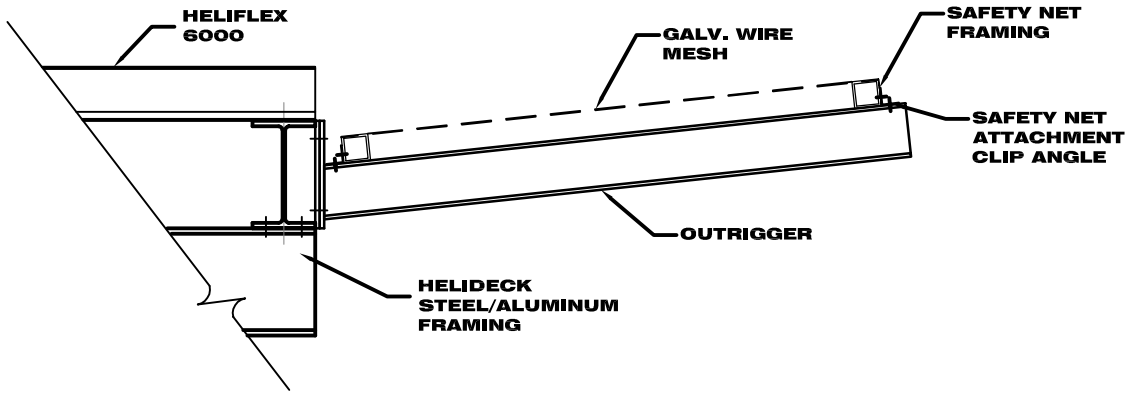

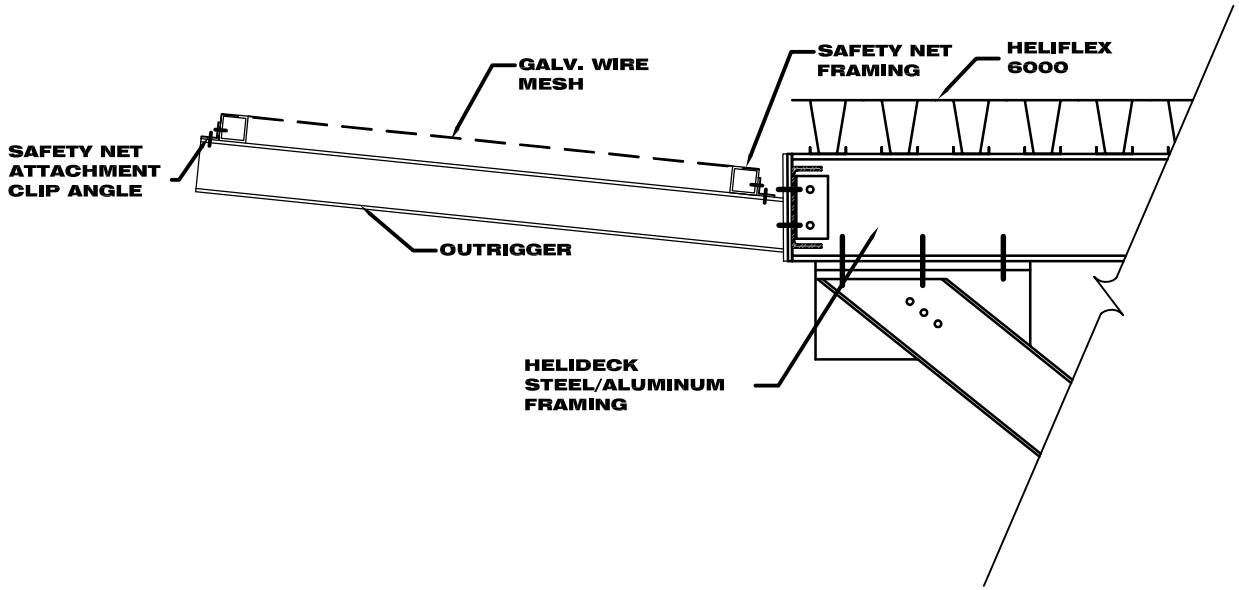

OUTRIGGER – SAFETY NET

No.	PRINT ISSUE	DATE

CODE	REVISION DESCRIPTION	DATE

USE AND REPRODUCTION OF THIS DRAWING

1. GENERAL CONDITIONS OF THE CONTRACT FOR CONSTRUCTION ARE PART OF THE CONTRACT DOCUMENTS AND DESCRIBE USE AND INTENT OF THE DRAWING. THE CONTRACT DOCUMENTS INCLUDE NOT ONLY THE DRAWINGS, BUT ALSO THE OWNER–CONTRACTOR AGREEMENT, CONDITIONS OF THE CONTRACT, THE SPECIFICATIONS, ADDENDA, AND MODIFICATIONS ISSUED AFTER EXECUTION OF THE CONTRACT. THESE CONTRACT DOCUMENTS ARE COMPLEMENTARY, AND WHAT IS REQUIRED BY ANY ONE SHALL BE AS BINDING AS IF REQUIRED BY ALL. WORK NOT COMPLETELY DELINEATED HEREON SHALL BE CONSTRUCTED OF THE SAME MATERIALS AND DETAILED SIMILARLY AS WORK SHOWN MORE COMPLETELY ELSEWHERE IN THE CONTRACT DOCUMENTS.

2. BY USE OF THE DRAWINGS FOR CONSTRUCTION OF THE PROJECT, THE OWNER REPRESENTS THAT HE HAS REVIEWED AND APPROVED THE DRAWINGS. THE CONTRACTOR REPRESENTS THAT HE HAS VISITED THE SITE, FAMILIARIZED HIMSELF WITH THE LOCAL CONDITIONS, VERIFIED FIELD DIMENSIONS AND CORRELATED HIS OBSERVATIONS WITH THE REQUIREMENTS OF THE CONTRACT DOCUMENTS.

3. AS INSTRUMENTS OF SERVICE, ALL DRAWINGS, SPECIFICATIONS, CADD DISKS OR OTHER ELECTRONIC MEDIA AND COPIES THEREOF FURNISHED BY THE ENGINEER ARE HIS PROPERTY. THEY ARE TO BE USED ONLY FOR THIS PROJECT AND ARE NOT TO BE USED ON ANY OTHER PROJECT. CHANGES TO THE DRAWINGS MAY ONLY BE MADE BY THE ENGINEER.

THIS DRAWING IS PRELIMINARY AND IS ISSUED FOR REVIEW ONLY – NOT FOR CONSTRUCTION UNTIL THIS BOX HAS BEEN CHECKED AND DATED.

☐ CHECKED BY: _____ DATE: _____

HELIDEX
OFFSHORE

[redacted]

DRAWN BY:	[redacted]
DESIGNED BY:	[redacted]
CHECKED BY:	[redacted]
APPROVED BY:	[redacted]
DATE:	[redacted]
CAD FILE:	[redacted]
PLOTTED:	[redacted]

[redacted]

HELIFLEX 6000

OFFSHORE
ALUMINUM
HELIDECK

OUTRIGGER SAFETY NET

HELIDEX OFFSHORE

SCALE	DRAWING No.
[redacted]	S–2
	1 OF 4

10661